LOCUS MAP

NOT TO SCALE

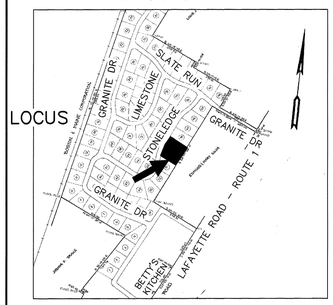

SOIL CLASS: 510 – HOOSIC

(SOURCE: USDA–SCS SOIL SURVEY)

BENCH MARKS: DATUM = ASSUMED

#1 SET NAIL PINE EL 54.66
#2 SET PK EL 49.63
#3 WATER SHUTOFF EL 49.42

DESIGN INTENT:

1. THE BOTTOM OF THE EFFLUENT DISPOSAL SYSTEM SHALL BE CONSTRUCTED AT ELEVATION 48.8 WHICH IS NO MORE THAN 2.6' BELOW EXISTING GROUND AT THE HIGH CONTOUR THE DESIGNED EDS. (ELEV 51.4)

SUITABLE REPLACEMENT AREA:

MUST BE DETERMINED BY RESUBMITTAL PER ENV–WQ 1003.10

LEGEND:

50 — EXISTING CONTOUR
(50) — PROPOSED CONTOUR
50.0 — EXISTING SPOT ELEVATION
(50.0) — PROPOSED SPOT ELEVATION

NOTES:

1. THIS PLAN IS NOT TO BE CONSTRUED AS A BOUNDARY SURVEY. PROPERTY LINES SHOWN ARE APPROXIMATED BASED ON INFORMATION FROM THE FOLLOWING SOURCE:
   RCRD PLAN D10742
2. NHDES–WS&PCD SUBDIVISION APPROVAL NUMBER: 17912
   PREVIOUS CONSTRUCTION APPROVAL 101387
3. THIS SYSTEM IS NOT DESIGNED TO HANDLE GARBAGE DISPOSAL, JACUZZI BATH, OR SEWAGE EJECTOR PUMP WASTE. BACKWASH FROM WATER SOFTENER SYSTEMS SHOULD BE DISCHARGED TO A SEPARATE DRYWELL.
4. a) NO SURFACE WATER WITHIN 75'
   b) NO WELLS WITHIN 75'
   c) NO HYDRIC B SOILS WITHIN 75'
   d) NO HYDRIC A SOILS WITHIN 75'
   OF PROPOSED SYSTEM

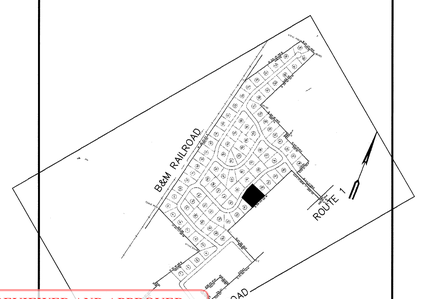

PLOT PLAN

NO SCALE

REVIEWED AND APPROVED
IN ACCORDANCE WITH THE REQUIREMENTS OF THE NH DEPT OF ENVIRONMENTAL SERVICES
WATER DIVISION
Eric Thomas
Date: 7/22/2015
#eCA2015072218

IF MORE THAN 18" COVER, LEACH FIELD MUST BE VENTED

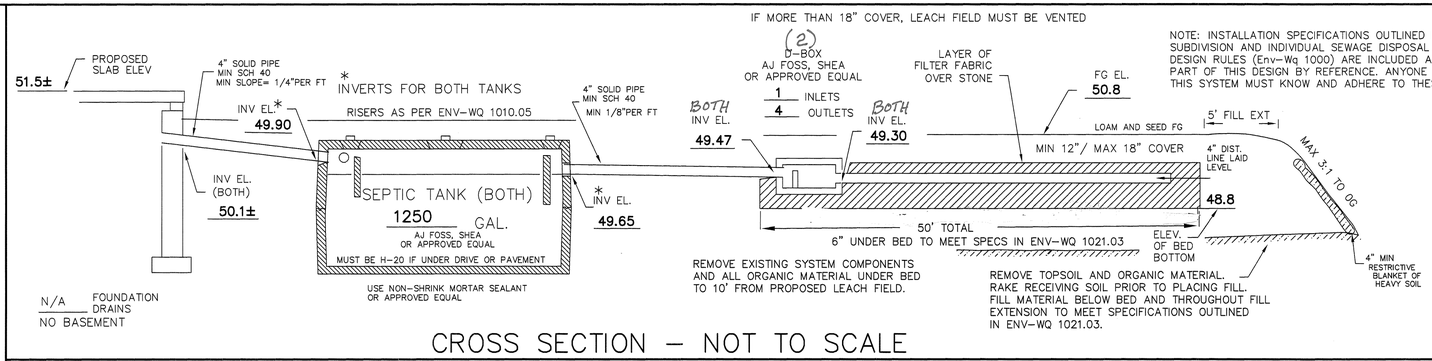

NOTE: INSTALLATION SPECIFICATIONS OUTLINED IN SUBDIVISION AND INDIVIDUAL SEWAGE DISPOSAL SYSTEM DESIGN RULES (Env–Wq 1000) ARE INCLUDED AS PART OF THIS DESIGN BY REFERENCE. ANYONE WHO INSTALLS THIS SYSTEM MUST KNOW AND ADHERE TO THESE RULES.

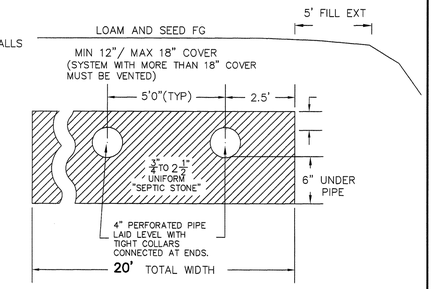

STONE TO MEET SPECIFICATIONS OUTLINED IN ENV WQ 1016.04

CROSS SECTION – NOT TO SCALE

PLAN : 1"=20'

5 DESIGNER MUST BE CONSULTED FOR ANY PROPOSED CHANGES OR ERRORS/DISCREPANCIES FOUND DURING SYSTEM INSTALLATION. (603 929–7404)
INSTALLER IS RESPONSIBLE FOR ANY TOWN PERMITS OR INSPECTIONS REQUIRED FOR THIS INSTALLATION.

6. PROPOSED ISDS IS DESIGNED TO SERVICE 2 STRUCTURES WITH DISHWASHER, WASHING MACHINE, TOILETS, AND TUB/SHOWERS. THERE IS NO KNOWN BURIAL SITE OR CEMETERY ON THE LOT OR THE ABUTTING LOT WITHIN 100' OF ANY COMPONENT OF THE ISDS OR WELL

THIS IS A "SHELF" PLAN PREPARED ONLY TO ALLOW FOR THE PROPOSED REPLACEMENT OF EXISTING MOBILE HOMES WITH CHANGE IN BUILDING FOOTPRINT. LOADING WILL REMAIN THE SAME (MAX 4 PERSONS EACH STRUCTURE) (UNDER RULE 1014.15 REQUIREMENT)

PROPOSED SYSTEM IS ONLY INTENDED FOR INSTALLATION IN EVENT OF EXISTING SYSTEM FAILURE. ALL UTILITIES MUST BE FIELD VERIFIED PRIOR TO INSTALLATION OF NEW STRUCTURE. NEW STRUCTURES MUST BE MINIMUM 5' FROM EXISTING SEPTIC TANKS AND LEACH FIELD. WATER LINES MUST BE RELOCATED AS NEEDED TO MAINTAIN 25' FROM LEACH FIELD AND 10' FROM SEPTIC TANK. RELOCATE OTHER UNDERGROUND UTILITIES AS NEEDED TO ACCOMODATE NEW SYSTEM COMPONENTS.

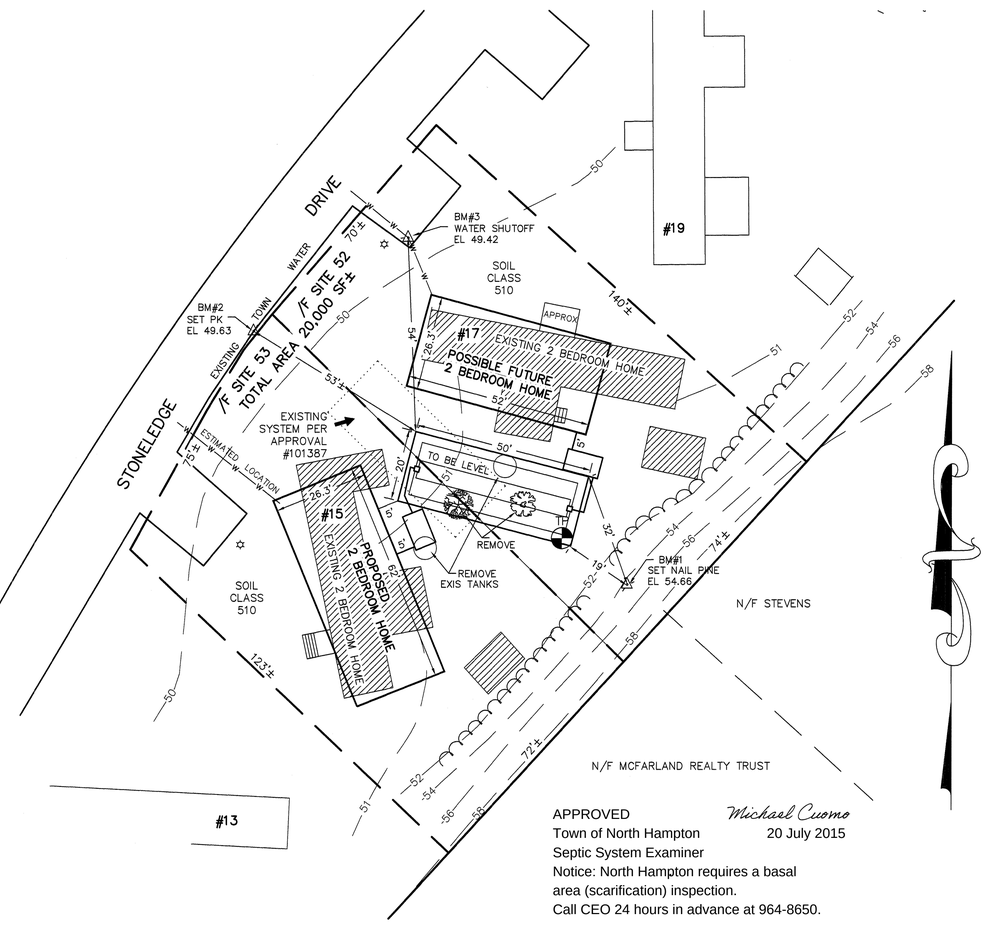

APPROVED *Michael Cuomo*
Town of North Hampton 20 July 2015
Septic System Examiner
Notice: North Hampton requires a basal area (scarification) inspection.
Call CEO 24 hours in advance at 964-8650.

SYSTEM OWNER IS RESPONSIBLE FOR THE FOLLOWING OPERATING REQUIREMENTS

ENV–WS 1023.01 (c) SEPTIC TANKS SHALL BE INSPECTED FOR ACCUMULATION OF SLUDGE AND SURFACE SCUM AT LEAST ONCE EVERY YEAR. (b) WHEN THE COMBINED THICKNESS OF SLUDGE AND SURFACE SCUM EQUAL 1/3 OR MORE OF THE TANK DEPTH, THE TANK SHALL BE PUMPED BY A LICENSED SEPTIC TANK PUMPER.
ENV–WS 1023.02 TO PREVENT OBSTRUCTION OF THE DISTRIBUTION LINES AND LEACH FIELD, GREASE AND BULKY WASTE SHALL NOT BE FLUSHED OR OTHERWISE INTRODUCED INTO THE SEPTIC SYSTEM.
ENV–WS 1023.03 TOXIC AND HAZARDOUS MATERIALS SHALL NOT BE FLUSHED OR OTHERWISE INTRODUCED INTO THE SEPTIC SYSTEM.
ENV–WS 1023.04 TO PREVENT DAMAGE TO THE DISTRIBUTION LINES AND LEACH FIELD, VEHICLES, LIVESTOCK, AND OTHER HEAVY OBJECTS SHALL NOT BE ALLOWED ON THE LEACH FIELD.
ENV–WS 1023.05 IF WET AREAS APPEAR ON THE GROUND SURFACE ABOVE THE DISTRIBUTION LINES OR LEACH FIELD OR IF DISAGREEABLE ODORS OCCUR, THE SYSTEM SHALL BE INSPECTED FOR THE SOURCE OF THESE PROBLEMS, AND CORRECTIVE ACTION SHALL BE TAKEN.

TP TEST PIT DATA

DATE: JULY 8, 2015
TOWN INSPECTOR: MIKE CUOMO

TEST PIT #1 ELEV 51.4

0 –12 "	10YR3/3	FINE SANDY LOAM, GRANULAR FRIABLE
12–24"	10YR5/6	FINE SANDY LOAM, GRANULAR FRIABLE
24–50"	2.5Y6/4	GRAVELLY SAND, LOOSE SINGLE GRAIN
50–90"	2.5Y4/4	VERY GRAVELLY SAND, LOOSE SINGLE GRAIN
90–96"		GRAVELLY SAND, LOOSE SINGLE GRAIN POSSIBLE REDOX

NO EVIDENCE OF SHWT TO 90", NO OBSERVED WATER
NO REFUSAL TO 96"

PT PERC TEST DATA

DESIGN PERC RATE: 2 MIN/IN
DESIGN LOADING: TOTAL 4 BEDROOMS EXISTING
AREA REQUIRED: 750 SF REQUIRED
AREA PROPOSED: 20' X 50' = 1000 SF PROVIDED

SEPTIC SYSTEM PLAN

RULE ENV–WQ 1004.15 REPLACEMENT DESIGN FOR INSTALLATION ONLY IN EVENT OF EXIS SYSTEM FAILURE

LOCUS: #15 & #17 STONELEDGE DRIVE
GRANITE POST GREEN (/F PINE ACRES)
TAX MAP 17 LOTS 82 –52 AND 82–53
NORTH HAMPTON, NH

OWNER: LUCK ENTERPRISES, INC.
PO BOX 700
NORTH HAMPTON, NH 03862–0700

NEW HAMPSHIRE Designer of Subsurface Disposal Systems
Anne W. Bialobrzeski No. 348
Department of Environmental Services

APPLICANT:
STOCKTON SERVICES
PO BOX 1306
HAMPTON, NH 03843–1306
603 929–7404

DATE: JULY 16, 2015
APPROVAL: